REAR SUSPENSION

CONTENTS

GENERAL INFORMATION 2
SPECIAL TOOLS 3
REAR SUSPENSION ASSEMBLY 4

GENERAL INFORMATION

The rear suspension is a 5-link coil spring type axle suspension, which assures comfortable ride and outstanding steering stability.

COIL SPRING

Items	3-door models	5-door models
Wire diameter × outer diameter × free length mm	11 × 131 × 306	11 × 131 × 305

CONSTRUCTION DIAGRAM

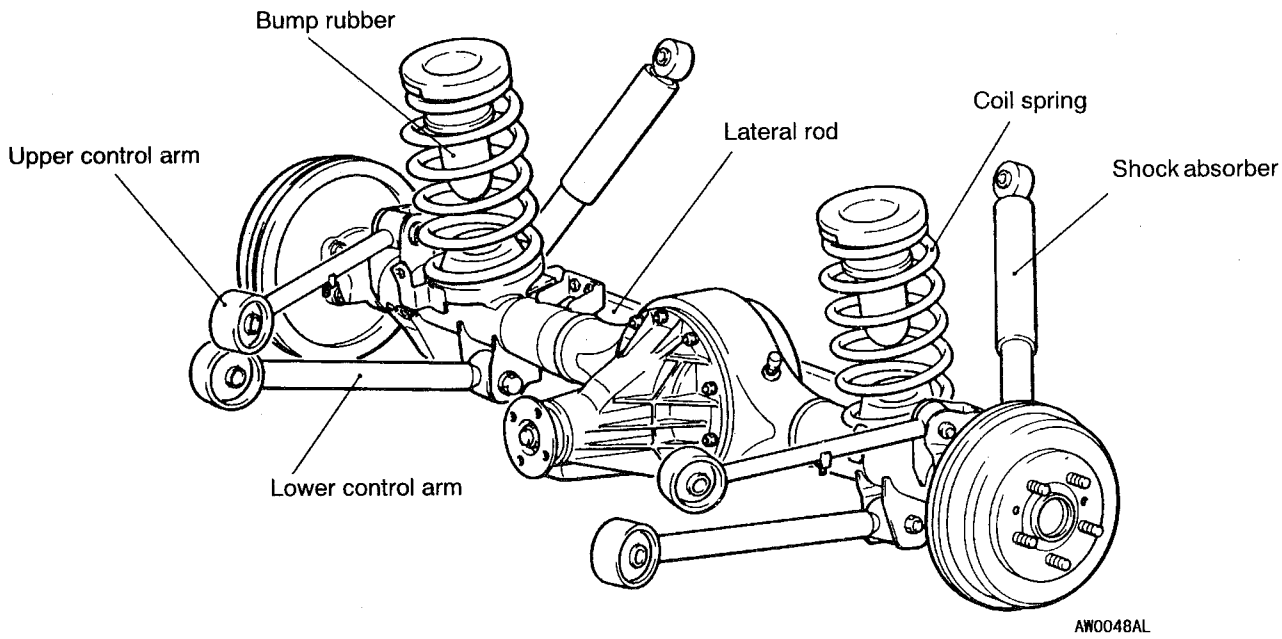

SPECIAL TOOLS

Tool	Number	Name	Use
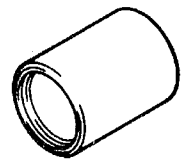 B990847	MB990847	Rear suspension bushing remover and installer base	• Upper arm rear bushing driving out and press-fitting • Lower arm rear bushing driving out and press-fitting
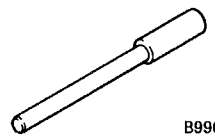 B990947	MB990947	Lower arm bushing arbor	
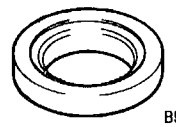 B990831	MB990832	Lower arm rear bushing remover and installer ring	Upper arm rear bushing driving out and press-fitting
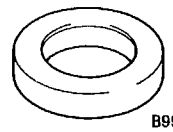 B991154	MB991154	Upper arm bushing guide	
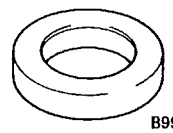 B991154	MB991155	Lower arm bushing guide	Lower arm rear bushing driving out and press-fitting
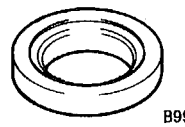 B990831	MB990831	Upper arm bushing remover and installer ring	
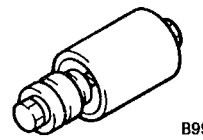 B990958	MB990958	Bushing remover and installer	• Upper arm front bushing driving out and press-fitting • Lower arm front bushing driving out and press-fitting
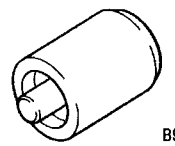 B990983	MB990983	Bushing remover and installer arbor	

REAR SUSPENSION ASSEMBLY

34100330113

REMOVAL AND INSTALLATION

Caution
***: To prevent bushings from breakage, the parts indicated by * should be temporarily tightened, and then fully tightened with the vehicle on the ground in the unladen condition.**

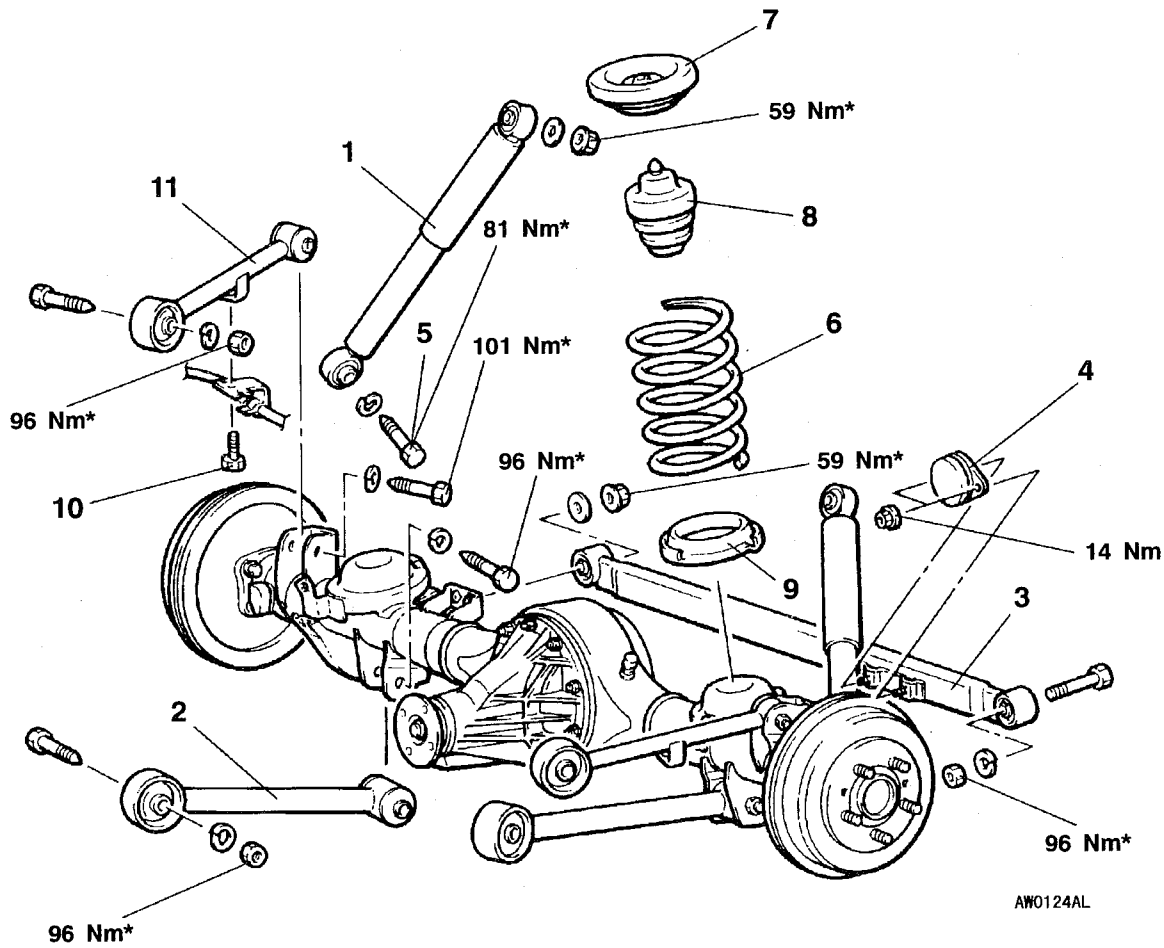

1. Shock absorber
2. Lower arm
3. Lateral rod
4. Dynamic damper
5. Shock absorber installation bolt

Coil spring removal steps

5. Shock absorber installation bolt
▶A◀ 6. Coil spring
7. Silencer sheet
8. Bump stopper
9. Lower spring pad

Upper arm removal steps

6. Coil spring
10. Rear wheel speed sensor installation bolt
11. Upper arm

INSTALLATION SERVICE POINT

▶A◀ COIL SPRING INSTALLATION

Install the coil spring so that its end with identification colour faces upward.

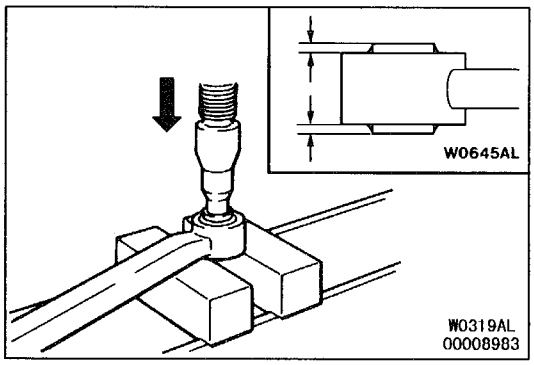

LATERAL ROD BUSHING REPLACEMENT

1. Use a press to press in and out the bushing.
2. Apply ample amount of soapy water to the outer surface of the bushing and inner surface of the lateral rod pipe, and then press-fit the bushing so that both ends protrude evenly.

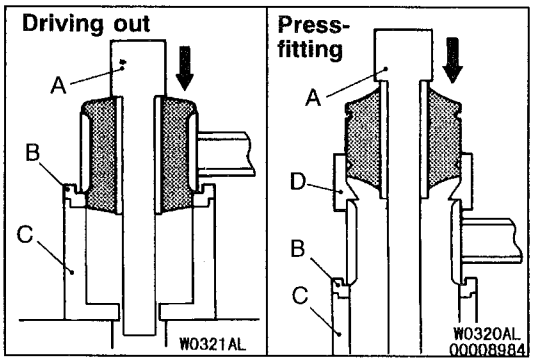

UPPER ARM BUSHING/LOWER ARM BUSHING REPLACEMENT

UPPER ARM REAR BUSHING, LOWER ARM REAR BUSHING

1. Use the special tools and a press to press in and out the bushing.

   SPECIAL TOOL

Item	Upper arm rear bushing	Lower arm rear bushing
A	MB990947	MB990947
B	MB990832	MB990831
C	MB990847	MB990847
D	MB991154	MB991155

2. Apply ample amount of soapy water to the outer surface of bushing and inner surface of arm pipe, and then press-fit the bushing so that both ends protrude evenly.

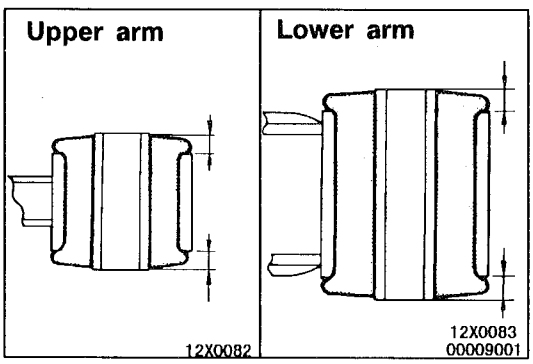

UPPER ARM FRONT BUSHING, LOWER ARM FRONT BUSHING

1. Use a press and the special tools to press in and out the bushing.

   NOTE
   Press in the bushing from the chamfered side of the arm pipe.

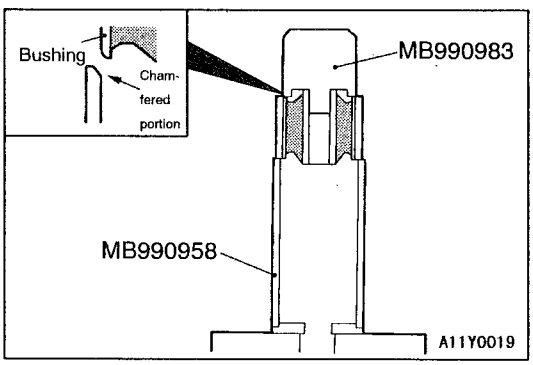

2. Install the bushing so that both ends protrude evenly.

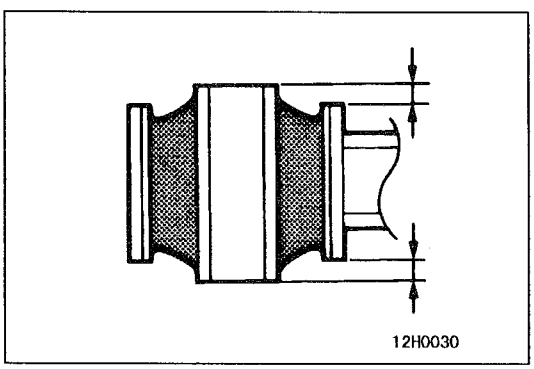

NOTES